ALLNET IP Kamera Bullet / Outdoor / 5MP / IR / Low-Light / M

>>> Al artículo de la tienda

EAN CODE

4 0 3 8 8 1 6 1 1 7 8 3 0

ALLNET IP Camera Bullet / Outdoor / 5MP / IR / Low-Light / Motorized varifocal lens / 93° / "ALL-CAM2496v3-LEFN"

Highlights:

- **Optics**
- 1/2.7", with light source
- SmartIR, up to 50m (164 ft) IR distance
- Up to 120 dB optical WDR (Wide Dynamic Range)
- **Compression**
- Ultra 265, H.265, H.264, MJPEG
- Triple streams
- 2592*1944@20fps in main stream
- ROI (Region of Interest)
- **Network**
- ONVIF compliance
- **Setup**
- DC12V or PoE power supply
- Wide voltage range of ±25% in DC
- Micro SD, up to 256 GB
- Alarm 1 input and 1 output, audio 1 input and 1 output
- IP67 ingress protection
- IK10 vandal resistant

Key Features

Dimensions

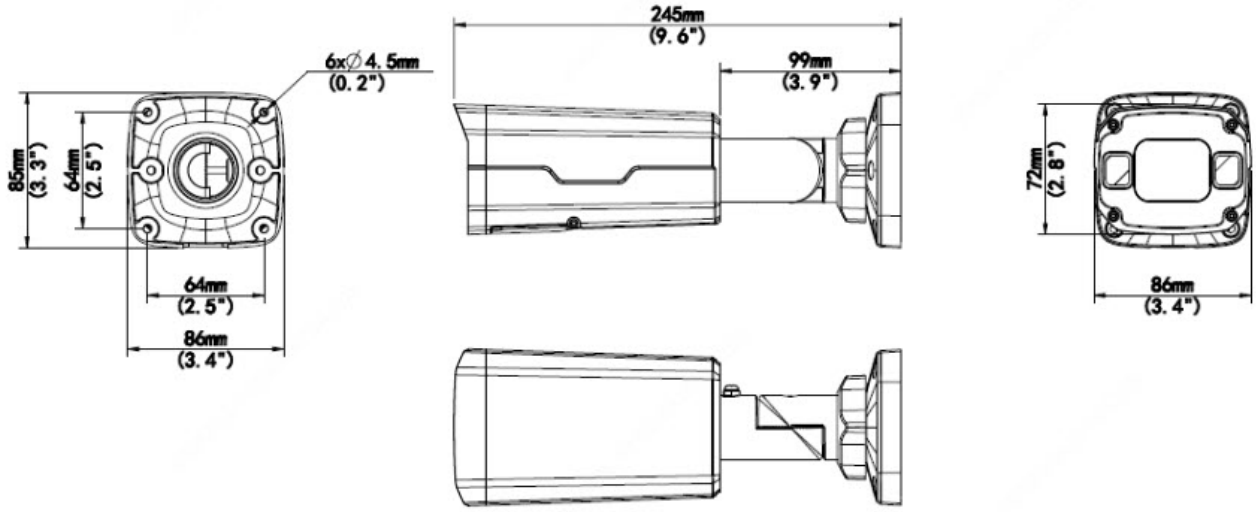

Technical Details:

	ALL-CAM2496v2-LEFN				
Camera					
Sensor	1/2.7",5.0 megapixel, progressive scan, CMOS				
Lens	2.7 ~ 13.5mm, AF automatic focusing and motorized zoom lens				
DORI Distance	Lens (mm)	Detect (m)	Observe (m)	Recognize (m)	Identify (m)
	2.7	60.8	24.3	12.2	6.1
	13.5	303.8	121.5	60.8	30.4
Angle of View (H)	106.25°~ 30.42°				
Angle of View (V)	56.36°~ 17.22°				

Angle of View (O)	110.34°~34.18°		
Adjustment angle	Pan: 0° ~ 360°	Tilt: 0° ~ 90°	Rotate: 0° ~ 360°
Shutter	Auto/Manual, 1 ~ 1/100000s		
Minimum Illumination	Colour: 0.002Lux (F1.2, AGC ON) 0Lux with IR on		
Day/Night	IR-cut filter with auto switch (ICR)		
Digital noise reduction	2D/3D DNR		
S/N	>56 dB		
IR Range	Up to 50m (164ft) IR range		
Wavelength	850nm		
IR On/Off Control	Auto/Manual		
Defog	Digital Defog		
WDR	120dB		
Video			
Video Compression	Ultra 265, H.265, H.264, MJPEG		
H.264 code profile	Baseline profile, Main profile, High profile		
Frame Rate	Main Stream:5MP (2880*1620), Max 30fps; 4MP (2560*1440), Max 30fps; 3MP (2304*1296), Max 30fps; 1080P (1920*1080), Max 30fps; Sub Stream: 720P (1280*720), Max 30fps; D1 (720*576), Max 30fps; 640*360,Max 30fps; 2CIF(704*288), Max 30fps; CIF(352*288), Max 30fps; Third Stream: D1 (720*576), Max 30fps; 640*360,Max 30fps; 2CIF(704*288), Max 30fps; CIF(352*288), Max 30fps;		
Video Bit Rate	128 Kbps~16 Mbps		
OSD	Up to 8 OSDs		
Privacy Mask	Up to 4 areas		
ROI	Up to 8 areas		
Motion Detection	Up to 4 areas		
Image			
White Balance	Auto/Outdoor/Fine Tune/Sodium Lamp/Locked/Auto2		

Digital Noise Reduction	2D/3D DNR
Smart IR	Supported
Flip	Normal/Vertical/Horizontal/180°/90°Clockwise/90°Anti-clockwise
Dewarping	N/A
HLC	Supported
BLC	Supported
Audio	
Audio Compressio n	G.711
Two-way audio	Supported
Suppression	Supported
Sampling Rate	8KHZ
Storage	
Edge Storage	Micro SD, up to 256GB
Network Storage	ANR
Network	
Protocols	IPv4, IGMP, ICMP, ARP, TCP, UDP, DHCP, RTP, RTSP, RTCP, DNS, DDNS, NTP, FTP, UPnP, HTTP, HTTPS, SMTP, SSL, SNMP
Compatible Integration	ONVIF (Profile S, Profile G, Profile T), API
Client	EZStation EZView EZLive
Web Browser	Plug-in required live view: IE9+, Chrome 41 and below, Firefox 52 and below
	Plug-in free live view: Chorme 57.0+, Firefox 58.0+, Edge 16+, Safari 11+
Interface	
Audio I/O	Input: impedance 35k?; amplitude 2V [p-p]
	Output: impedance 600?; amplitude 2V [p-p]
Alarm I/O	1/1
Network	1 RJ45 10M/100M Base-TX Ethernet
Certifications	

Certifications	CE: EN 60950-1 UL: UL60950-1 FCC: FCC Part 15
General	
Power	DC 12V±25%, PoE (IEEE 802.3af)
	Power consumption: Max 8.0 W
Dimensions (L × W × H)	245 × 86 × 72mm (9.6” × 3.4” × 2.8”)
Net Weight	0.92kg (2.0lb)
Material	Metal
Working Environment	-30°C ~ 60°C (-22°F ~ 140°F), Humidity: ?95% RH (non-condensing)
Strorage Environment	-30°C ~ 60°C (-22°F ~ 140°F), Humidity: ?95% RH (non-condensing)
Surge Protection	6KV
Ingress Protection	IP67
Vandal Resistant	IK10
Reset Button	N/A

Accesorios

Número de artículo	Denominación
159710	ALLNET ALL-CAM2496-LEFN Caja de conexiones
159709	ALLNET Soporte de mástil para ALL-CAM24xx
99305	ALLNET ALL951000 Protector contra rayos Cat 6
186548	ALLNET ALL0488v6 Inyector PoE Gigabit PoE & PoE+ (15.4W/30W)
112270	ALLNET ALL048900V2 Inyector PoE Gigabit AT++ 90W
113046	ALLNET ALL048605PD Switch 5x Gigabit, LT-PoE
99315	ALLNET ALL8804PoE+ Switch 8x Gigabit HPoE, 2x PoE+ o 4x PoE
93392	ALLNET ALL8808POE Switch 8x Gigabit HPoE, 4x PoE+ o 8x PoE
223949	ALLNET Switch full managed Layer2+ 10 Port • 8x GbE • PoE Budget 130W • 8x PoE at • 2x SFP • 19" • Fanless • JSON API • ALL-SG8610PMJ

Número de artículo	Denominación
223949	ALLNET Switch full managed Layer2+ 10 Port • 8x GbE • PoE Budget 130W • 8x PoE at • 2x SFP • 19" • Fanless • JSON API • ALL-SG8610PMJ
194025	ALLNET Switch full managed 24 Port Gigabit 390W / 24x PoE+ / 4x SFP / FANLESS / 19" / "ALL-SG8626PM"
112082	ALLNET ALL-SG8826PMX-10G Switch 24x Gigabit HPoE + 2x SFP+
200656	ALLNET 2288 Videograbador NVR con Networkoptix, RK3399, 4GB
124355	Networkoptix Software de gestión de vídeo IP, 1 canal
146999	ALLNET PoE USV Backup - USV für Kameras, Accesspoints ALL900