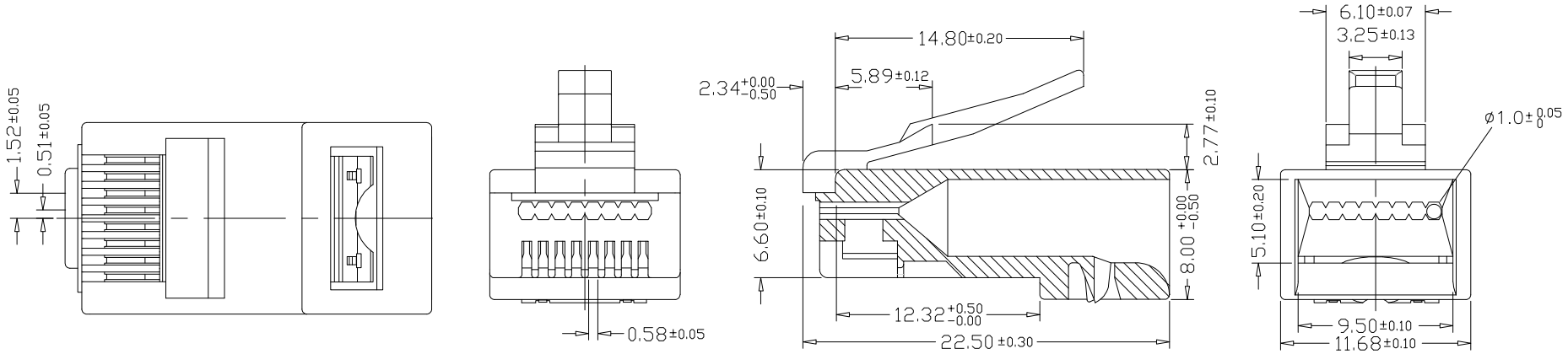

NOTES:

1. Operation Temerature:-40℃~+85℃
2. Electrial Characteristics:
   2.1. Rated Current:125V AC,1.5A@25℃
   2.2. Contact Resistance:20mΩ Max.
   2.3. Insulation Resistance:500MΩ Min,100V DC/min.
   2.4. Voltage Proof:1000V AC/1 minute no breakdown
3. Mechanical Characteristics:
   3.1. Insertion Force & Withdrawal Force:30N Max.
   3.2. Durability:750 cycles Min.
4. Available for 24 or 26 AWG wire
5. SinglePack: 1set/SYNERGY21 A bag+label; SubPack: no; Carton +labelx2;

MATERIAL LIST:

NO.	MAT. NAME	DESCRIPTION	QT'Y	REMARK
②	PIN	3U″ Gold Plating	8	
①	PLUG	8P8C PLUG PC UL94V2 Transparence Unshielded For Flat Cable	1	

BY	CHK	REVISION RECORD MODIFICATIONS	DATE	REV.
		NEW	2021-08-24	A

SYNERGY 21			
CUSTOMER	AN	ITEM NO.	S215694
PRODUCT NAME	Modular Plug for Flat Cable(8P8C),unshielded	manufacture country: CHINA	UNTT MM
DRAWNBY	CHECKBY	APPOBY	DATE
SYNERGY 21	SYNERGY 21	SYNERGY 21	2021-08-24