Art.-Nr.: 209788
Herst.-Nr.: ALL-CAM2496v3-LEFN

ALLNET IP Kamera Bullet / Outdoor / 5MP / IR / Low-Light / Motorisiertes Vario-Objektiv / 93° / "ALL-CAM2496v3-LEFN"

>>> Zum Shop-Artikel

EAN CODE

4 0 3 8 8 1 6 1 1 7 8 3 0

Highlights:

- **Optik**
- 1/2,7'', mit Lichtquelle
- SmartIR, bis zu 50m (164 ft) IR Entfernung
- Bis zu 120 dB optischer WDR (Wide Dynamic Range)
- **Komprimierung**
- Ultra 265, H.265, H.264, MJPEG
- Dreifach-Streams
- 2592*1944@20fps im Hauptstrom
- ROI (Region von Interesse)
- **Netzwerk**
- ONVIF-Konformität
- **Aufbau**
- DC12V oder PoE-Stromversorgung
- Großer Spannungsbereich von ±25% in DC
- Micro SD, bis zu 256 GB
- Alarm 1 Eingang und 1 Ausgang, Audio 1 Eingang und 1 Ausgang
- IP67 Schutz gegen Eindringen
- IK10 vandalismusgeschützt

Key Features

Dimensions

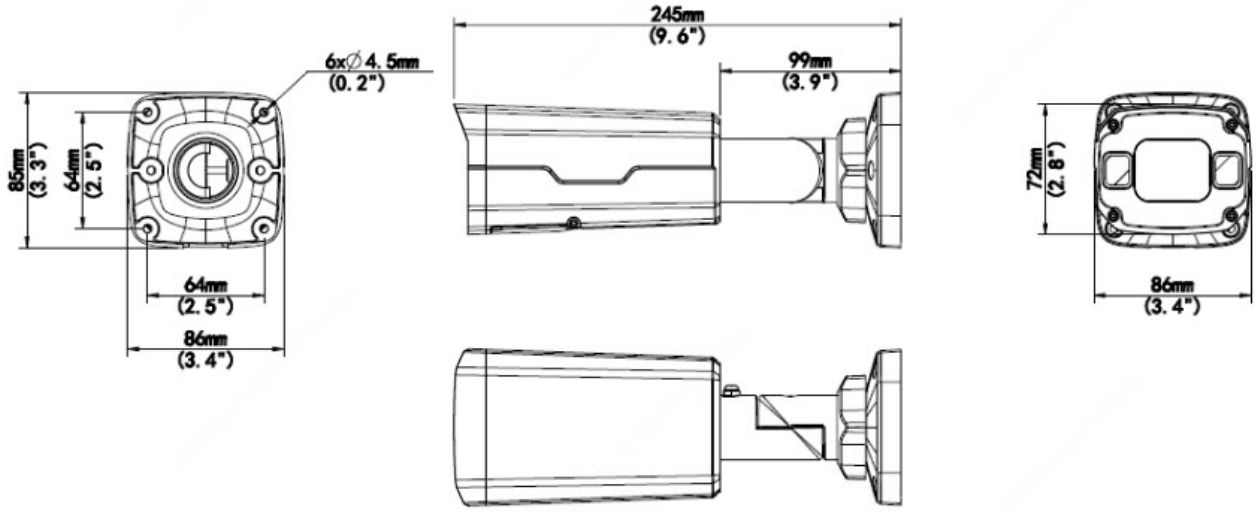

Links zu direkten Streams siehe =
https://service.allnet.de/index.php?/Knowledgebase/Article/View/347/0/ipcamera---link-fr-den-direkten-stream---all-cam24xx

Technical Details:

	ALL-CAM2496v2-LEFN				
Camera					
Sensor	1/2.7",5.0 megapixel, progressive scan, CMOS				
Lens	2.7 ~ 13.5mm, AF automatic focusing and motorized zoom lens				
DORI Distance	Lens (mm)	Detect (m)	Observe (m)	Recognize (m)	Identify (m)

	2.7	60.8	24.3	12.2	6.1
	13.5	303.8	121.5	60.8	30.4
Angle of View (H)	106.25°~ 30.42°				
Angle of View (V)	56.36°~ 17.22°				
Angle of View (O)	110.34°~34.18°				
Adjustment angle	Pan: 0° ~ 360°	Tilt: 0° ~ 90°	Rotate: 0° ~ 360°		
Shutter	Auto/Manual, 1 ~ 1/100000s				
Minimum Illumination	Colour: 0.002Lux (F1.2, AGC ON) 0Lux with IR on				
Day/Night	IR-cut filter with auto switch (ICR)				
Digital noise reduction	2D/3D DNR				
S/N	>56 dB				
IR Range	Up to 50m (164ft) IR range				
Wavelength	850nm				
IR On/Off Control	Auto/Manual				
Defog	Digital Defog				
WDR	120dB				
Video					
Video Compression	Ultra 265, H.265, H.264, MJPEG				
H.264 code profile	Baseline profile, Main profile, High profile				
Frame Rate	Main Stream:5MP (2880*1620), Max 30fps; 4MP (2560*1440), Max 30fps; 3MP (2304*1296), Max 30fps; 1080P (1920*1080), Max 30fps; Sub Stream: 720P (1280*720), Max 30fps; D1 (720*576), Max 30fps; 640*360,Max 30fps; 2CIF(704*288), Max 30fps; CIF(352*288), Max 30fps; Third Stream: D1 (720*576), Max 30fps; 640*360,Max 30fps; 2CIF(704*288), Max 30fps; CIF(352*288), Max 30fps;				
Video Bit Rate	128 Kbps~16 Mbps				
OSD	Up to 8 OSDs				
Privacy Mask	Up to 4 areas				

ROI	Up to 8 areas
Motion Detection	Up to 4 areas
Image	
White Balance	Auto/Outdoor/Fine Tune/Sodium Lamp/Locked/Auto2
Digital Noise Reduction	2D/3D DNR
Smart IR	Supported
Flip	Normal/Vertical/Horizontal/180°/90°Clockwise/90°Anti-clockwise
Dewarping	N/A
HLC	Supported
BLC	Supported
Audio	
Audio Compressio n	G.711
Two-way audio	Supported
Suppression	Supported
Sampling Rate	8KHZ
Storage	
Edge Storage	Micro SD, up to 256GB
Network Storage	ANR
Network	
Protocols	IPv4, IGMP, ICMP, ARP, TCP, UDP, DHCP, RTP, RTSP, RTCP, DNS, DDNS, NTP, FTP, UPnP, HTTP, HTTPS, SMTP, SSL, SNMP
Compatible Integration	ONVIF (Profile S, Profile G, Profile T), API
Client	EZStation EZView EZLive
Web Browser	Plug-in required live view: IE9+, Chrome 41 and below, Firefox 52 and below
	Plug-in free live view: Chorme 57.0+, Firefox 58.0+, Edge 16+, Safari 11+
Interface	

Audio I/O	Input: impedance 35k?; amplitude 2V [p-p]
	Output: impedance 600?; amplitude 2V [p-p]
Alarm I/O	1/1
Network	1 RJ45 10M/100M Base-TX Ethernet
Certifications	
Certifications	CE: EN 60950-1 UL: UL60950-1 FCC: FCC Part 15
General	
Power	DC 12V±25%, PoE (IEEE 802.3af)
	Power consumption: Max 8.0 W
Dimensions (L × W × H)	245 × 86 × 72mm (9.6” × 3.4” × 2.8”)
Net Weight	0.92kg (2.0lb)
Material	Metal
Working Environment	-30°C ~ 60°C (-22°F ~ 140°F), Humidity: ?95% RH (non-condensing)
Strorage Environment	-30°C ~ 60°C (-22°F ~ 140°F), Humidity: ?95% RH (non-condensing)
Surge Protection	6KV
Ingress Protection	IP67
Vandal Resistant	IK10
Reset Button	N/A

Zubehör

Art.-Nr.	Name
159710	ALLNET IP Kamera zbh. Junctionbox/Montagebox for ALL-CAM2496-LEFN
159709	ALLNET IP Kamera zbh. Polemount/Masthalter for ALL-CAM24xx
99305	ALLNET TP Cat 6 Überspannungs-/Blitzschutz Surge Protector ALL95100 Indoor
186548	ALLNET PoE Injektor Gigabit PoE & PoE+ (15,4W/30W) / Kunststoffgehäuse / "ALL0488v6"
112270	ALLNET PoE Injektor Gigabit / PoE & PoE+ & PoE & LT PoE (15,4W/30W/60W/90W) / Metallgehäuse / "ALL048900v2"

Art.-Nr.	Name
99315	ALLNET Switch unmanaged 8 Port Gigabit 63W / 4x PoE+ / 4x LAN / Lüfterlos /19" / "ALL8804PoE+"
223949	ALLNET Switch full managed Layer2+ 10 Port • 8x GbE • PoE Budget 130W • 8x PoE at • 2x SFP • 19" • Lüfterlos • JSON API • ALL-SG8610PMJ
223949	ALLNET Switch full managed Layer2+ 10 Port • 8x GbE • PoE Budget 130W • 8x PoE at • 2x SFP • 19" • Lüfterlos • JSON API • ALL-SG8610PMJ
194025	ALLNET Switch full managed 24 Port Gigabit 390W / 24x PoE+ / 4x SFP / Lüfterlos / 19" / "ALL-SG8626PM"
200656	ALLNET Videoserver NVR Box mit Networkoptix Server, RK3399, 4GB, ALL2288
124355	Networkoptix IP Nx-Professional Videomanagement Software 1 Kanal