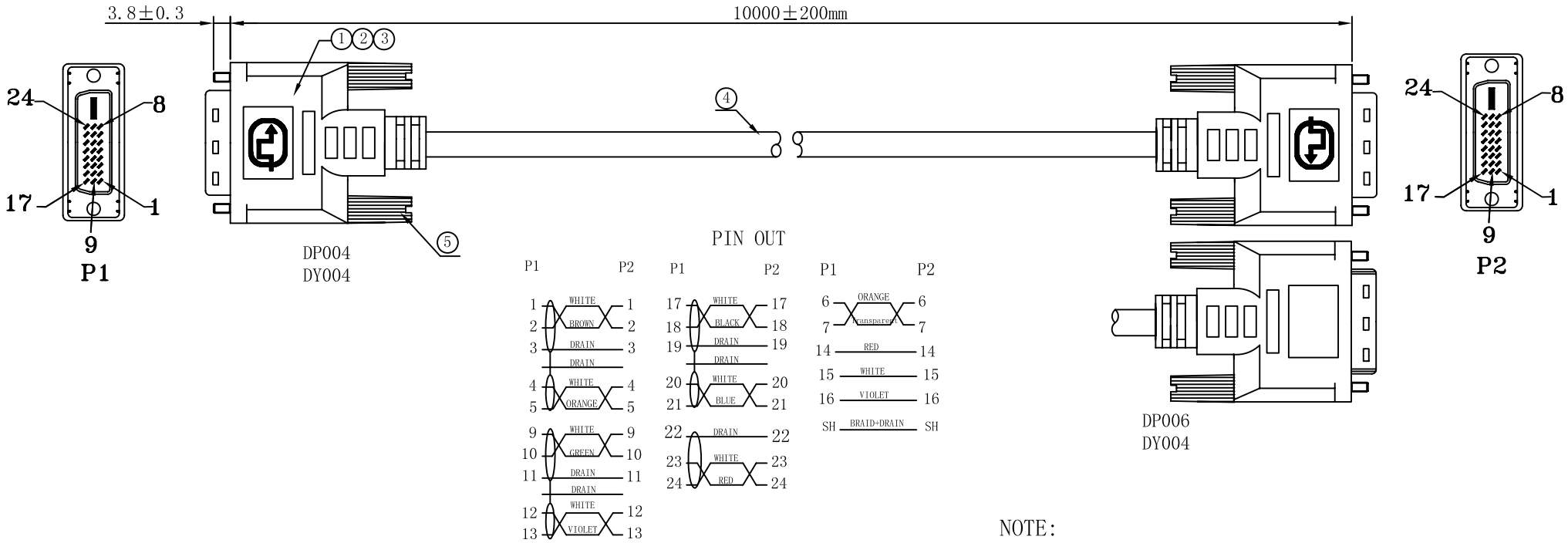

NOTE:

1. Electrical test:
   (1). 100% open short & miss wire test;
   (2). Insulation resistance:DC 300V 10M ohm;
   (3). Contactor resistance:3 ohm;
   (4). Dielectric strength:150V AC/Sec, 1mA.
2. RoHS COMPLIANT
3. PRINT WORD:AWM STYLE 20276 80℃ 30V VW-1 DVI
4. PACKING:SYNERGY 21 PE Blister+LABEL

MATERIAL LIST:

NO.	PARTS NAME	SPECIFICATION STANDARD	QT'Y	REMARK
⑧	PE BAG	SYNERGY 21 SLIP PE BAG	1	
⑦	LABEL	NO DRY GLUE LABEL	1	
⑥	MINI TIE	BLACK	2	
⑤	SCREW	SCREW SPEC: #4-40 NICKEL PLATED MATERIAL SCREW, ¢4.0mm*L:42mm, MOLDING BLACK;	4	
④	CABLE	DVI 28AWG(7/0.127BC*1P+E+WAM)*7+7/0.127BC*1P+7/0.127BC*3C+AEB B=0.12mm/9*16 AL-MG, E=7/0.10mm, JACKET:PVC/BLACK OD:8.5mm	1	
③	MOLD HOOD	88A PVC COLOR: BLACK	2	
②	INNER MOLD	LD-PE	2	
①	DVI CONNECTOR	DVI (24+1)/M Solder Type, The Pin Gold Plating, the shell Nickel Plating	2	

BY	CHK	REVISION RECORD MODIFICATIONS	DATE	REV.
		NEW	2009-11-25	A

SYNERGY 21					
CUSTOMER		REF.		ITEM NO.	S215252
PRODUCT NAME	DVI 24+1 M/M CABLE	manufacture country:	CHINA	UNTT	MM
DRAWNBY	CHECKBY	APPOBY	DATE		
SYNERGY 21	SYNERGY 21	SYNERGY 21	2009-11-25		

PACKING

SYNERGY 21 C Bag 250mm*290mm

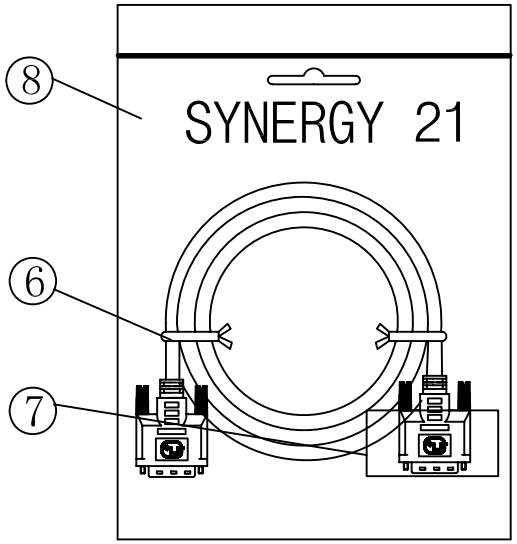

SHIPPING MARK

FRONT SHIPPING MARKS	SIDE SHIPPING MARKS
PI/NO.: Short Decription.:DVI Cable Length: m Colour: C/NO.: RoHS Compliant MADE IN CHINA	Item no: Short Decription.:DVI Cable Length: m Colour: Q'TY: N.W G.W MEAS.

					SYNERGY 21					
					CUSTOMER		REF.		ITEM NO.	S215252
					PRODUCT NAME	DVI 24+1 M/M CABLE		manufacture country:	CHINA	UNTT MM
		NEW	2009-11-25	A	DRAWNBY	CHECKBY		APPOBY		DATE
BY	CHK	REVISION RECORD MODIFICATIONS	DATE	REV.	SYNERGY 21	SYNERGY 21		SYNERGY 21		2009-11-25