

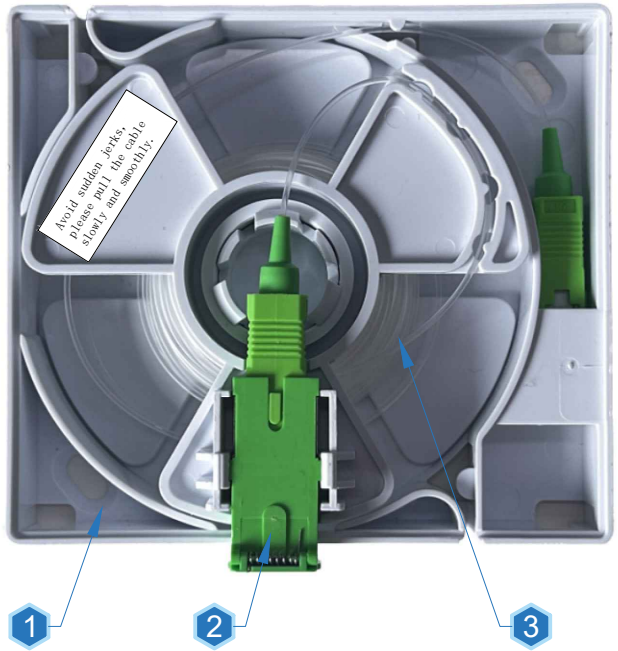

Note:
Avoid sudden jerks;
please pull the cable slowly and smoothly.
Chart:

ITEM NO.	LENGTH(m)
S215578	15.0
S215579	30.0

Packing:1pc/SYNERGY 21 A bag+label

MATERIAL LIST:

NO.	SPECIFICATION STANDARD	QT'Y	REMARK
③	SC/APC 8° SM Connector , Green	L	
②	SC Simplex Adapter (With External Laser Protection Shutter) Green	1pc	
①	multifunctional fiber storage box	1pc	

SYNERGY 21

CUSTOMER	AN			ITEM NO.	See the chart			
PRODUCT NAME	Extension box Pre-assembled invisable Simplex Patch cable SC/APC- SC/APC			Manufacture country	CHINA		UNIT	mm
		NEW	2026-07-07	A0	DRAWNBY	CHECKBY	APPOBY	DATE
BY	CHK	REVISION RECORD MODIFICATIONS	DATE	REV.	SYNERGY 21	SYNERGY 21	SYNERGY 21	2026-07-07

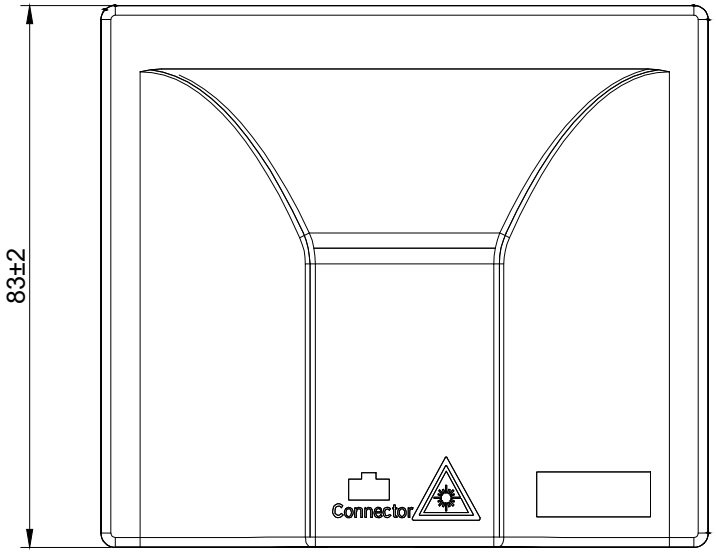

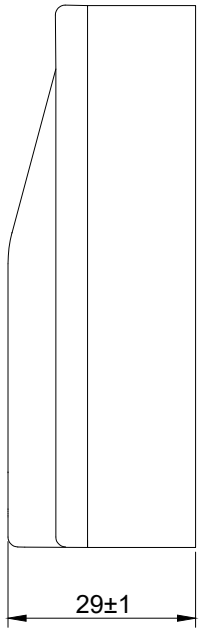

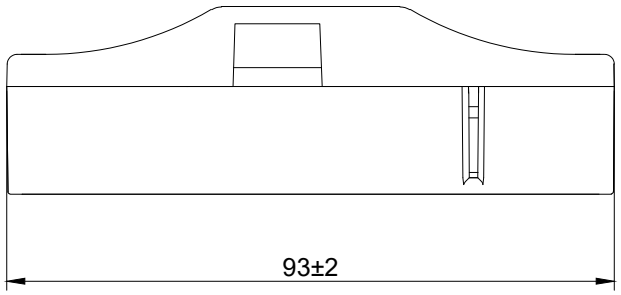

Note:
1. RoHS 2011/65/EU and amendment directives (EU) 2015/863 compliant;REACH 1907/2006/EC compliant.
2. Material:ABS,White RAL 9003,compliant with UL94 HB.

SYNERGY 21							
CUSTOMER	AN			ITEM NO.	See the chart		
PRODUCT NAME	multifunctional fiber storage box			Manufacture country	CHINA	UNIT	mm

		NEW	2026-07-07	A0	DRAWNBY	CHECKBY	APPOBY	DATE
BY	CHK	REVISION RECORD MODIFICATIONS	DATE	REV.	SYNERGY 21	SYNERGY 21	SYNERGY 21	2026-07-07

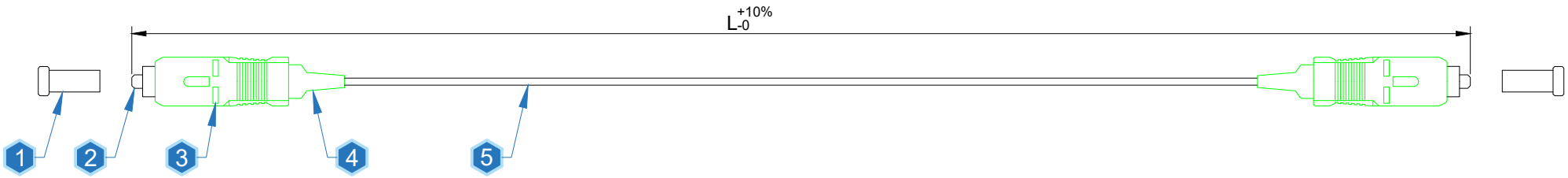

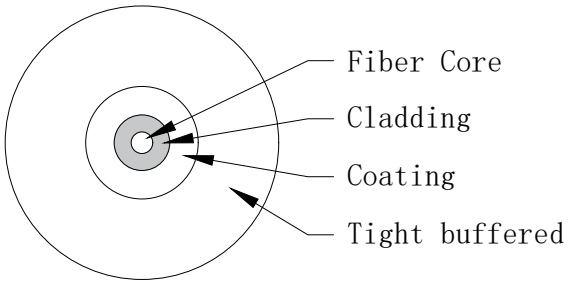

Chart:

ITEM NO.	LENGTH(m)
S215578	15.0
S215579	30.0

Note:

1. RoHS 2011/65/EU and amendment directives (EU) 2015/863 compliant;REACH 1907/2006/EC compliant.
2. Fiber optic cable compliant with CPR Fca.
   Short term tensile:10N

Test Grade Designation:Each to Reference		
Grade IL/RL	IEC61753 Grade B	
Insertion Loss (IL)	97%≤0.25dB mean≤0.12dB	IEC 61300-3-4
Return Loss(RL)	≥60dB	IEC 61300-3-6
Test Wavelength	1310nm	
End face inspection	×400	

MATERIAL LIST:

NO.	SPECIFICATION STANDARD	QT'Y	REMARK
⑤	Transparent Invisible G657.A2 9/125um fiber optic cable 0.9mm Nylon	L	
④	SC 0.9 Boot Green	2pcs	
③	SC Connector Green	2pcs	
②	SC/APC 8° SM Ceramic Ferrule	2pcs	
①	SC Dust Cap Transparent	2pcs	

SYNERGY 21

CUSTOMER	AN	ITEM NO.	See the chart
PRODUCT NAME	Transparent Invisible G657.A2 fiber optic cable 0.9mm SC/APC-SC/APC	Manufacture country	CHINA

UNIT mm

BY	CHK	REVISION RECORD MODIFICATIONS	DATE	REV.	DRAWNBY	CHECKBY	APPOBY	DATE
		NEW	2026-07-07	A0	SYNERGY 21	SYNERGY 21	SYNERGY 21	2026-07-07

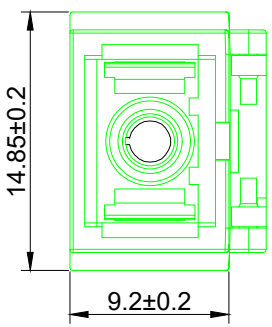

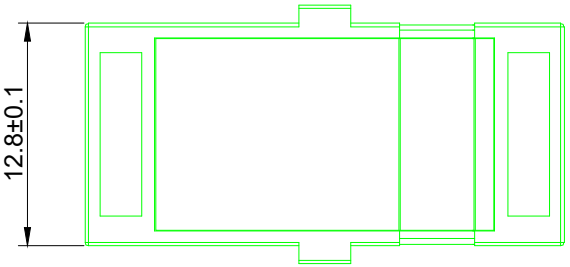

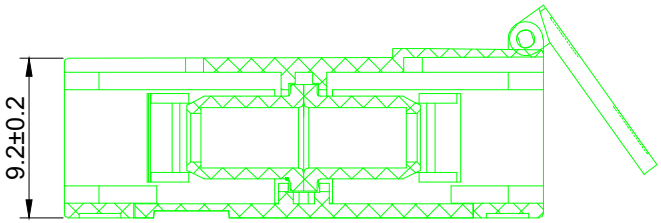

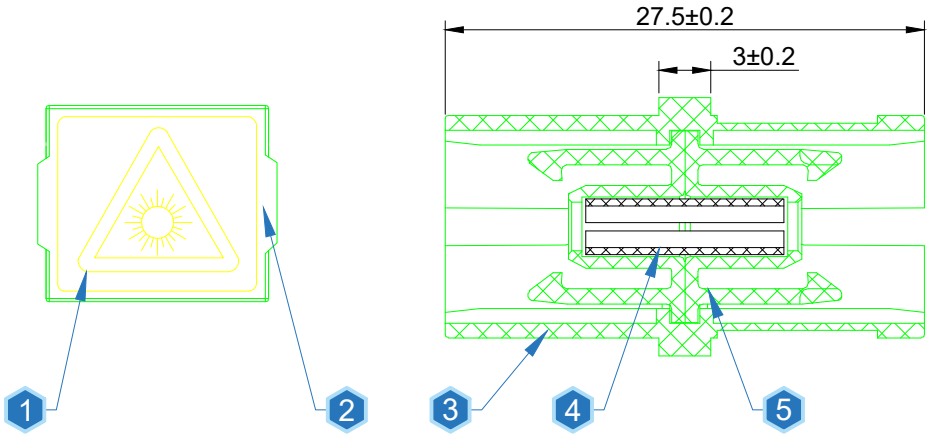

Label:

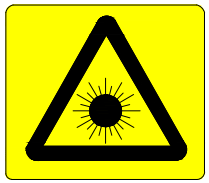

NOTE:

RoHS 2011/65/EU and amendment directives (EU) 2015/863 compliant;REACH 1907/2006/EC compliant.

Insertion Loss(dB)	≤0.10
Operating Temperature(° C)	-40～+80
Storage Temperature(° C)	-40～+80

MATERIAL LIST:

⑤	SC Bush Green	2pcs	
④	SC Sleeve ceramic	1pc	
③	SC Simplex one-piece Plastic body without Metal Mount Green	1pc	
②	SC Dust Cap Green	1pc	
①	Note that the laser label Color:Yellow	1pc	
NO.	SPECIFICATION STANDARD	QT'Y	REMARK

SYNERGY 21

CUSTOMER	AN		ITEM NO.	See the chart			
PRODUCT NAME	Low IL SC Simplex Adapter (With External Laser Protection Shutter) w/o flange		Manufacture country	CHINA		UNIT	mm
DRAWNBY	CHECKBY		APPOBY		DATE		
SYNERGY 21	SYNERGY 21		SYNERGY 21		2026-07-07		

		NEW	2026-07-07	A0
BY	CHK	REVISION RECORD MODIFICATIONS	DATE	REV.